ZONE	REV LTR	DESCRIPTION	E.O.	REVISED BY	DATE	APPR
–	–	ORIGINAL ISSUE		–	–	

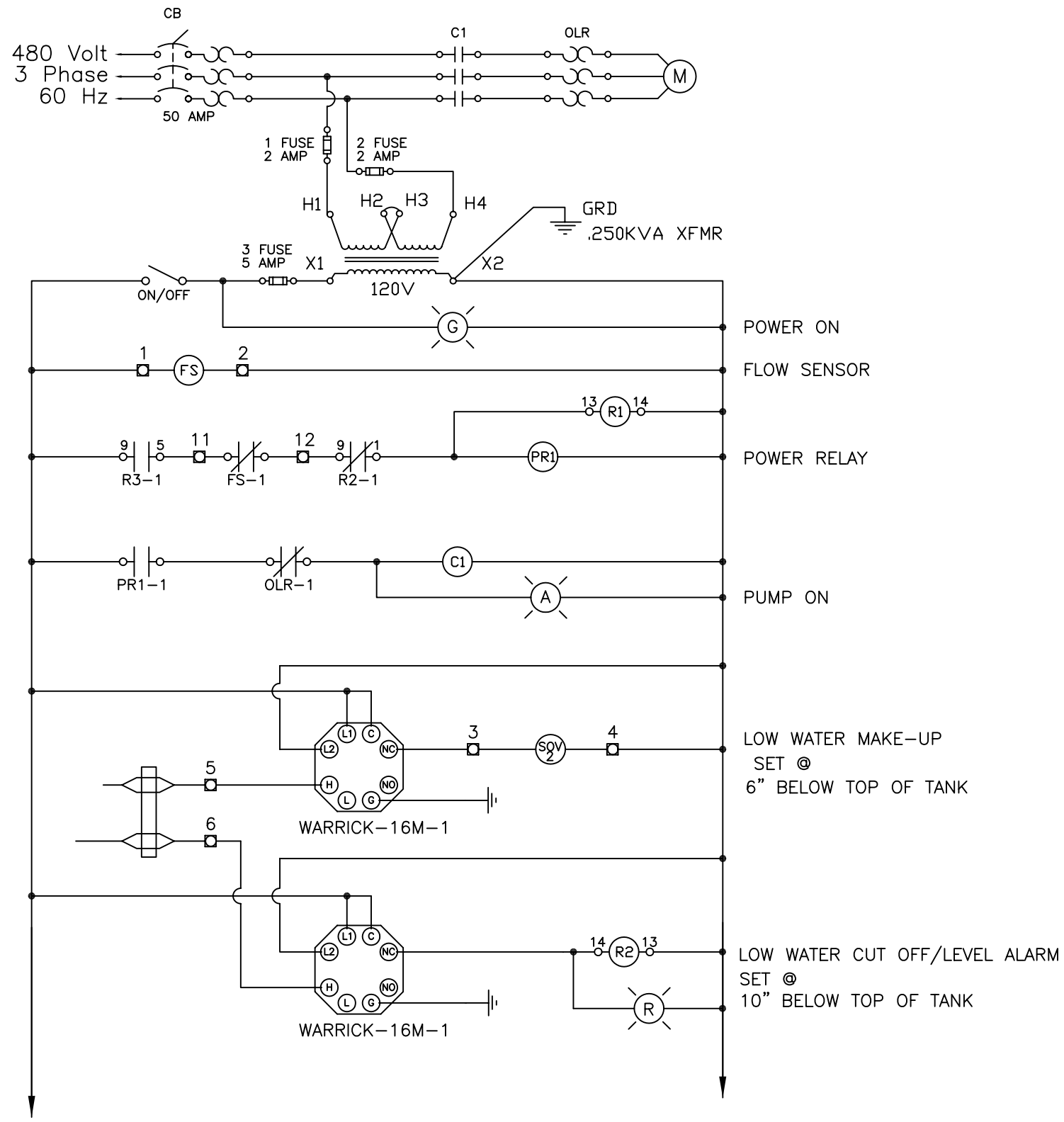

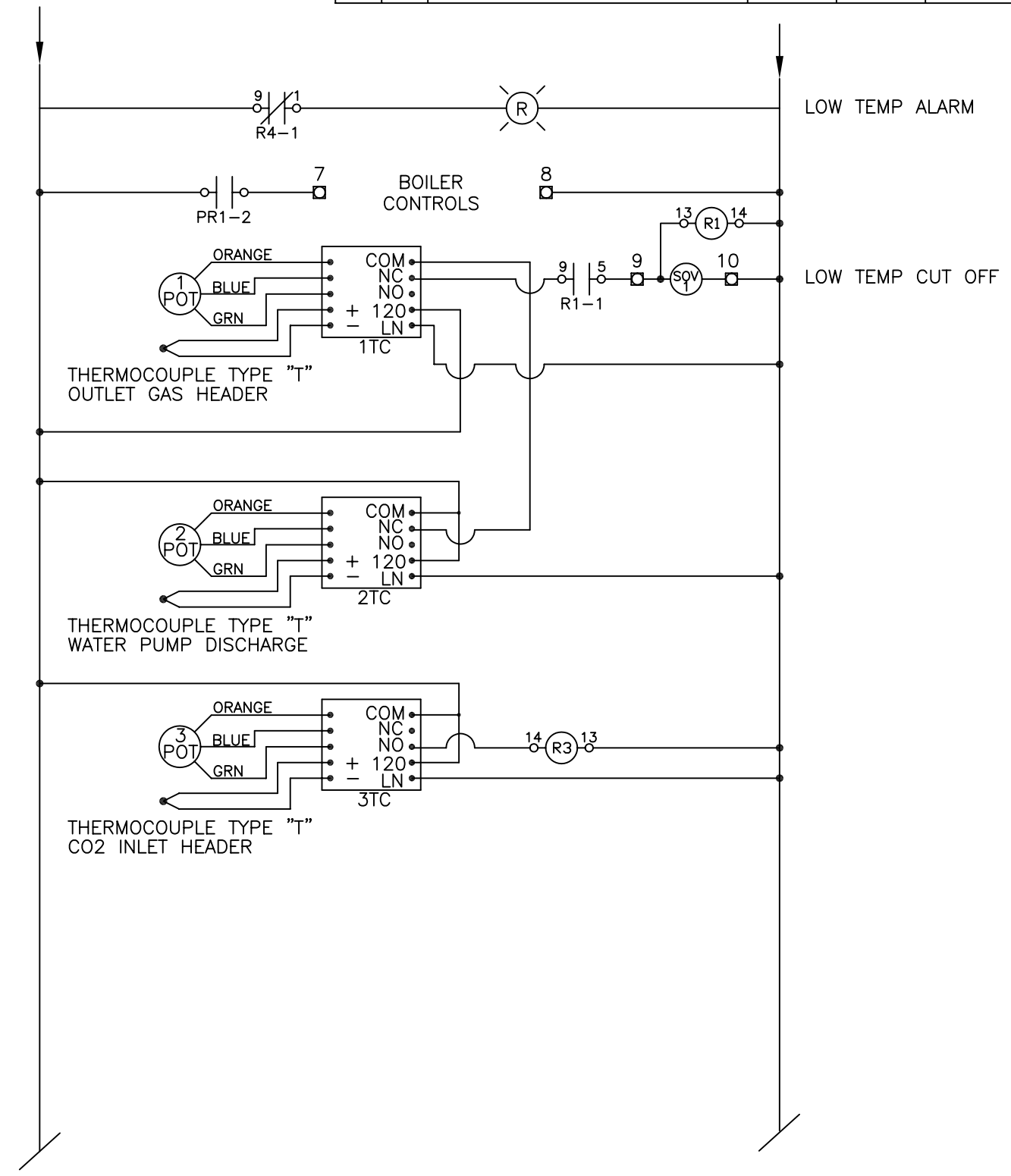

SEE SEPARATE PARTS LIST

CEXI

CRYOGENIC EXPERTS
531 Sandy Circle, Oxnard, California 93036
Toll Free 1–800–FOR–CEXI OR Phone (805) 981–4500 Fax. (805) 981–4501

UNLESS OTHERWISE NOTED:
FRACTIONS ±1/8"
DECIMALS X± .1
XX± .03
XXX± .01
ANGLES ± 1°
BREAK ALL SHARP EDGES
DIMENSIONS ARE IN INCHES

ORG JOB No. X041009

FILE –

APPROVALS	DATE
DESIGN: TDD	12–13–04
CHECKED:	
MANUF:	
RELEASED:	

TITLE
GAS FIRED STATIC WATER BATH
ELECTRICAL SCHEMATIC

MODEL
GFSWB–500

SIZE	FSCM NO.	DWG. NO.	REV.
B	55429	A992049	–

SCALE NTS | JOB NUMBER | SHEET 1 OF 1