ZONE	REV LTR	DESCRIPTION	DATE	APPR
MULTI	A	R3-1 TO N.O. CONTACT NUMS. R1-2, R2-2 ZONE B6	9-26-99	

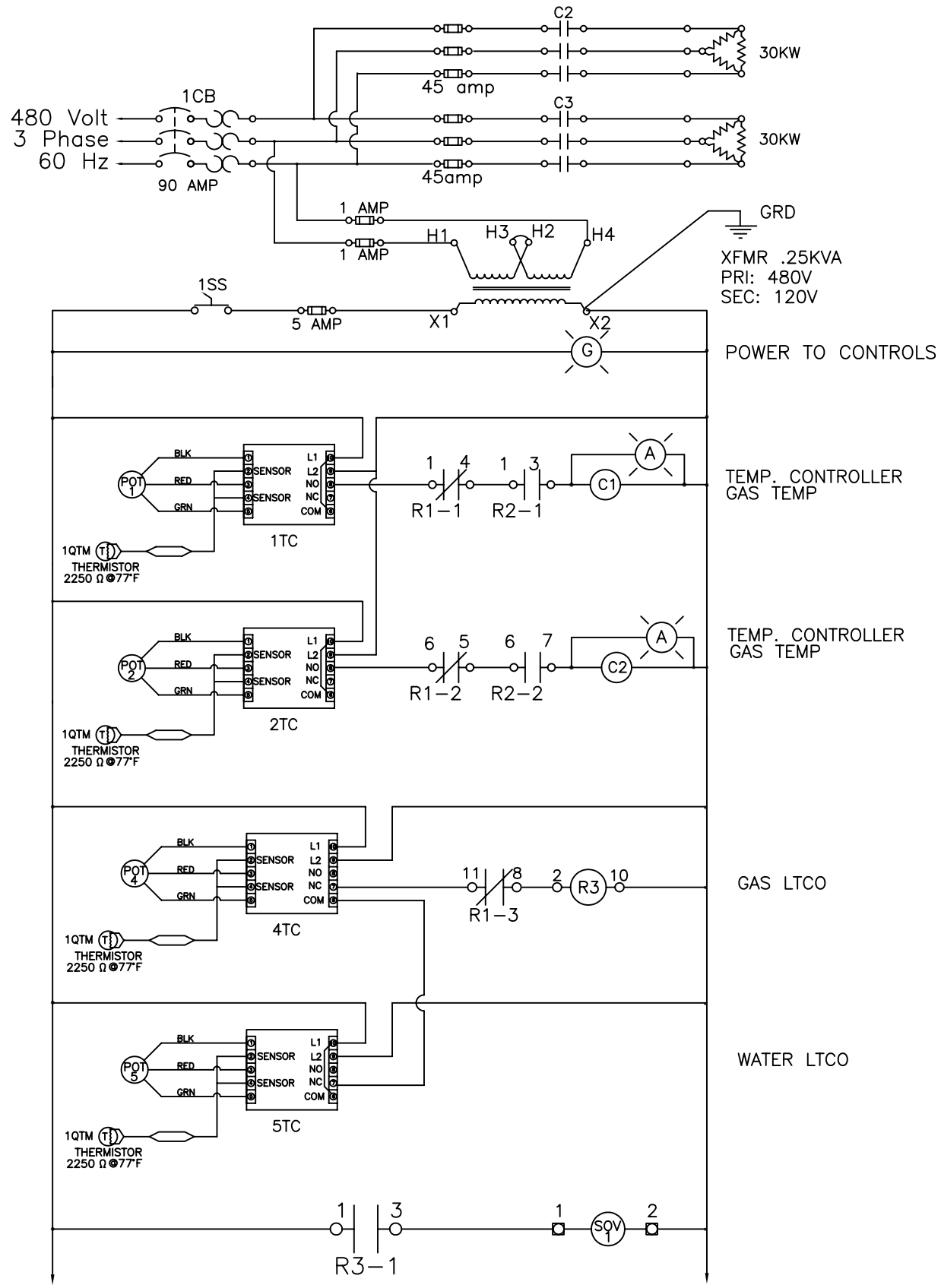

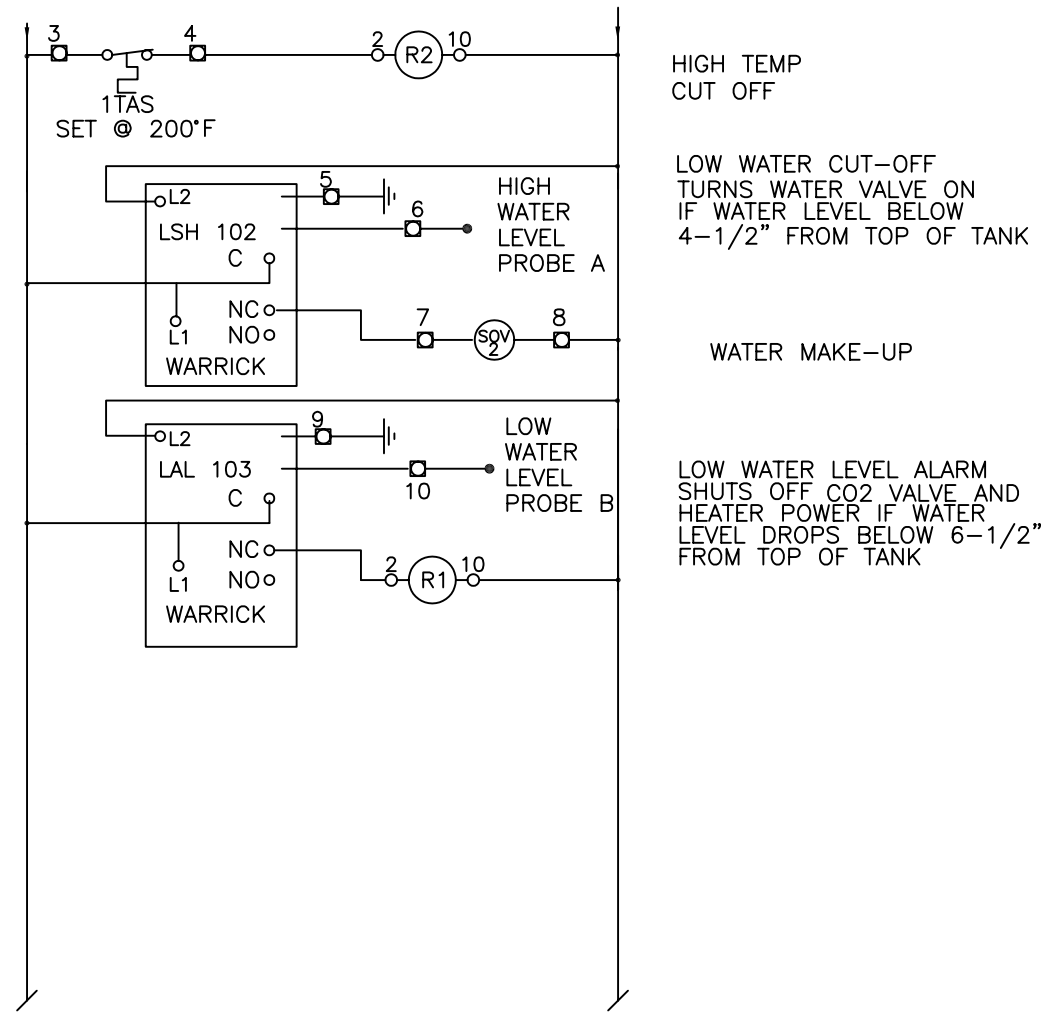

CRYOGENIC EXPERTS ✳ CRYOGENIC COMPONENTS
100 West Easy Street, Simi Valley, California 93065
Toll Free 1-800-FOR-CEXI OR Phone (805) 850-8631 Fax. (805) 520-8640

UNLESS OTHERWISE NOTED:	APPROVALS	DATE	TITLE
FRACTIONS ±1/4" DECIMALS X± .2 XX± .1 XXX± .01" ANGLES ± 1 BREAK ALL SHARP EDGES DIMENSIONS ARE IN INCHES	DESIGN TDD	8-25-99	ELECTRIC HEATED WATER BATH ELECTRIAL SCHEMATIC
	CHECKED:		MODEL EHWB-250-30KW
ORG. JOB NO.	MANUF.:		SIZE D · FSCM NO. 55429 · DWG. NO. A992024-1 · REV. A
	RELEASE:		SCALE NTS · JOB NUMBER · SHEET 1 OF 1